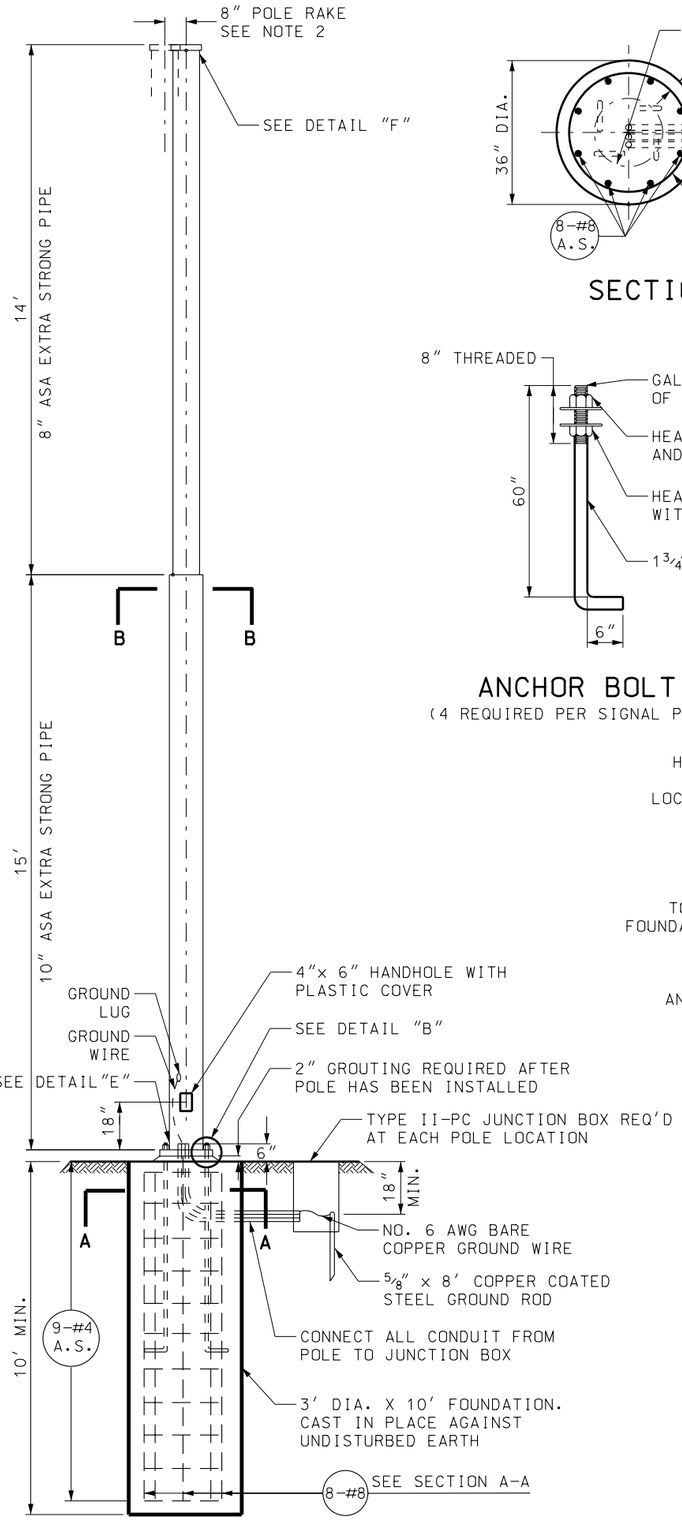

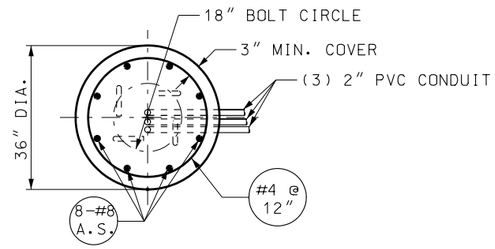

SECTION A-A

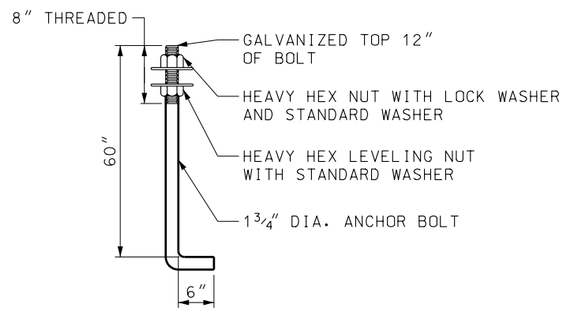

ANCHOR BOLT
(4 REQUIRED PER SIGNAL POLE)

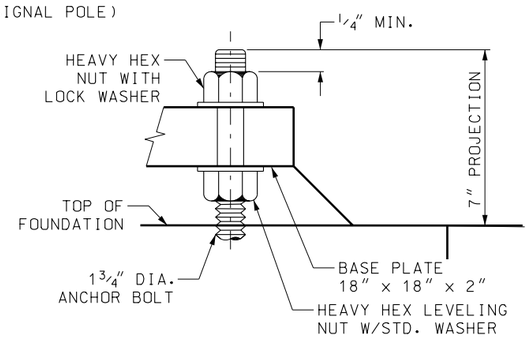

DETAIL "B"

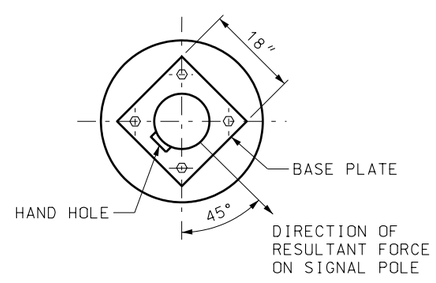

DETAIL "D"
ANCHOR BOLT LOCATION

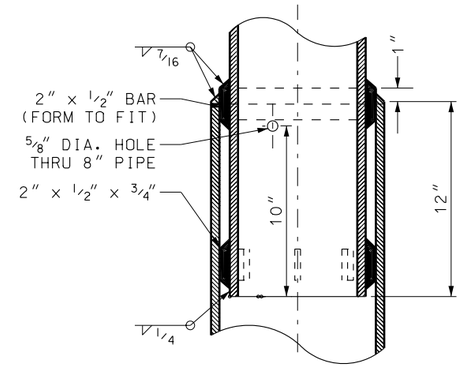

SECTION C-C

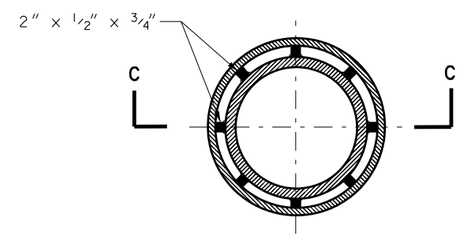

SECTION B-B

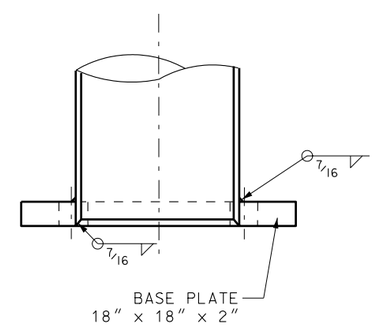

DETAIL "E"
BASE PLATE

NOTES:

1. DESIGN POLE IN ACCORDANCE WITH 2001 AASHTO STANDARD SPECIFICATION FOR STEEL SUPPORTS LUMINAIRES AND TRAFFIC SIGNALS. USE ASTM A53 GRADE B STEEL.
2. RAKE EACH POLE 8″ OPPOSITE THE DIRECTION OF EACH SINGLE PULL. FABRICATE THE POLE CAP, BASE PLATE AND SPLICE MATERIALS FROM ASTM A 36 STEEL.
3. HOT DIP GALVANIZED ALL STRUCTURAL STEEL AFTER FABRICATION IN ACCORDANCE WITH ASTM A 123.
4. FURNISH ANCHOR BOLTS CONFORMING TO ASTM A 307 EITHER HOOKED AS SHOWN OR WITH A REGULAR SQUARE HEAD AN 3/4″ × 5″ × 5″ PLATE WASHER TACK WELDED TO BOLT HEAD.
5. USE EPOXY COATED REBARS AND CLASS AA(AE) CONCRETE FOR FOUNDATION.
6. SUBMIT SHOP DRAWINGS TO UDOT ENGINEER.
7. PLACE ALL CONDUIT IN SAME TRENCH WHERE POSSIBLE.

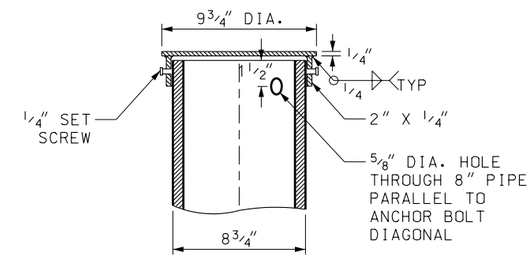

SECTION D-D

DETAIL "F"
POLE CAP

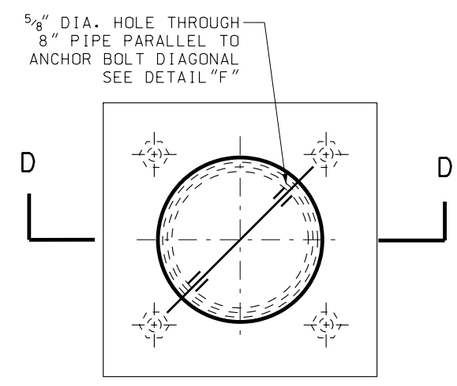

PLAN VIEW

NO.	DATE	APPR.	REMARKS
1	12/18/03	LM	ENTIRE DRAWING MODIFIED.

REVISIONS

UTAH DEPARTMENT OF TRANSPORTATION
STANDARD DRAWINGS FOR ROAD AND BRIDGE CONSTRUCTION
SALT LAKE CITY, UTAH

RECOMMENDED FOR APPROVAL — DEC.18,2003 DATE

CHAIRMAN STANDARDS COMMITTEE APPROVED — DEC.18,2003 DATE

DEPUTY DIRECTOR

SPAN WIRE SIGNAL POLE DETAIL
STANDARD DRAWING TITLE

STD DWG
SL 7

DGN File: N:\Est\Standard Drawings\Imperial\Approved\Change7Approved\SL07.dgn
29-JAN-2004