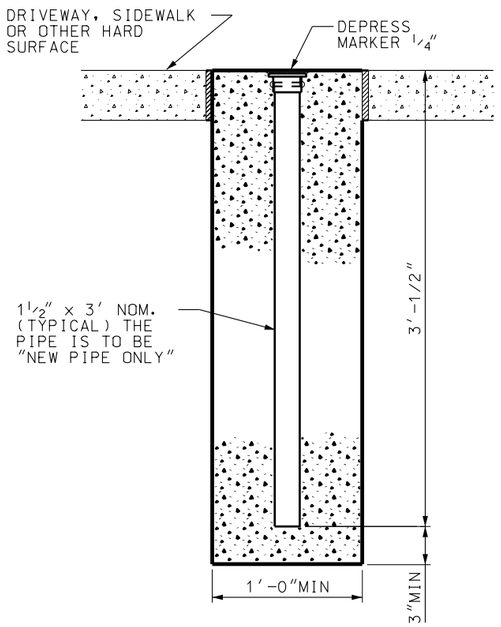

"A"

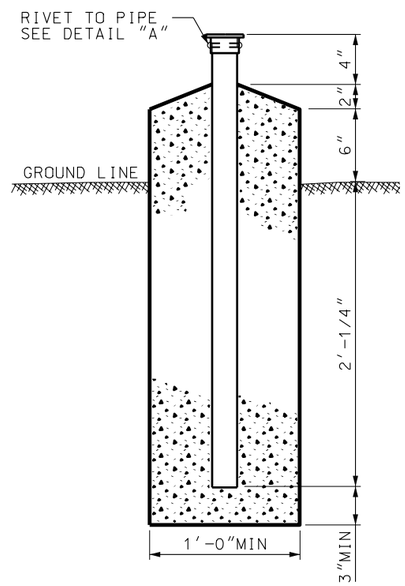

"B"

ALTERNATE INSTALLATIONS

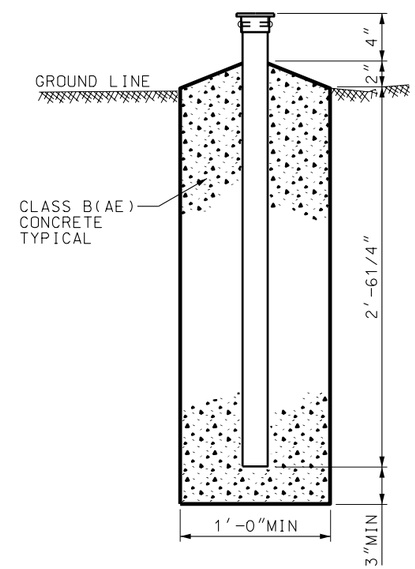

STANDARD INSTALLATION

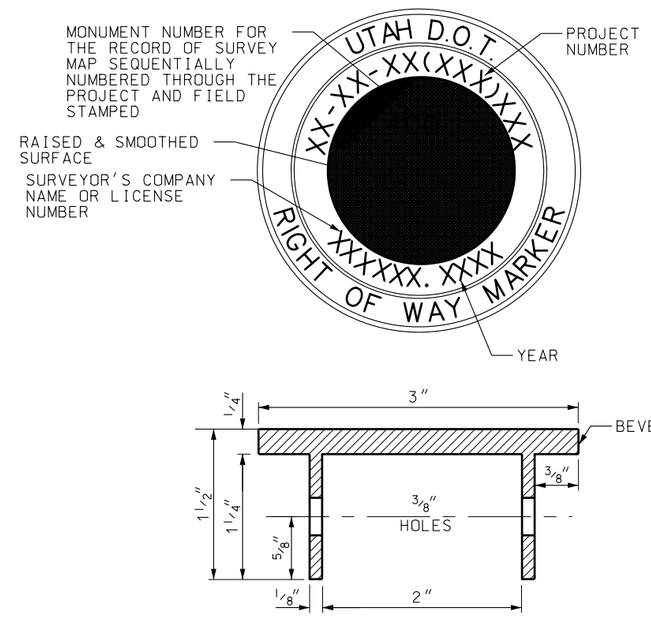

BRONZE CAP
DETAIL "A"

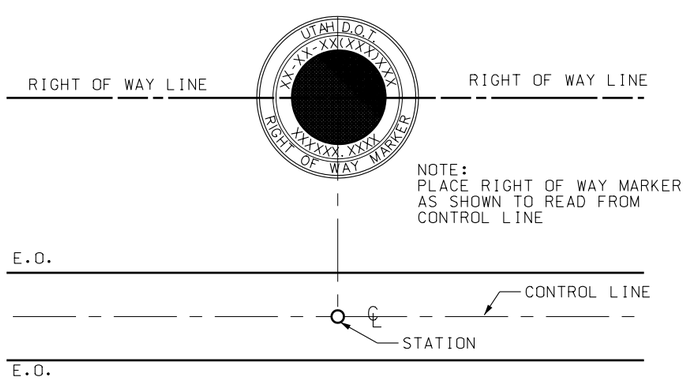

NOTES:

1. PLACE RIGHT OF WAY MARKERS AT EACH ANGLE POINT IN A RIGHT OF WAY LINE. PLACE RIGHT OF WAY MARKERS ON EACH RIGHT OF WAY LINE OPPOSITE THE PS, SC, CS AND ST OR OPPOSITE THE PC AND PT. WHERE THE RIGHT OF WAY PARALLELS THE CENTER LINE OF THE HIGHWAY AROUND A CURVE.
2. PLACE RIGHT OF WAY MARKERS IN ADDITION SO THAT NO INTERVAL WILL EXCEED 1000'. PLACE INTERMEDIATE MARKERS PREFERABLY ON SECTION LINES OR INTERSECTING PROPERTY LINES.
3. GRIND TO A SMOOTH SURFACE ALL EXPOSED SURFACES OF THE BRONZE CAP.
4. DEPRESS ALL LETTERS MINIMUM OF 1/16".
5. USE 3/16" HIGH LETTERS AND FIGURES.
6. USE ALTERNATE "A" INSTALLATION WHEN PLACING TOP OF BRONZE CAP FLUSH WITH HARD SURFACE AREA'
7. USE ALTERNATE "B" INSTALLATION WHEN PLACING MARKERS IN HEAVY BRUSH OR FOREST LANDS
8. ON THE RECORD OF SURVEY MAP SHOW THE STATION, OFFSET, PROJECT COORDINATES AND ELEVATION..

REVISIONS

NO.	DATE	APPR.	REMARKS

UTAH DEPARTMENT OF TRANSPORTATION
STANDARD DRAWINGS FOR ROAD AND BRIDGE CONSTRUCTION
SALT LAKE CITY, UTAH

RECOMMENDED FOR APPROVAL — JULY 03,2002 DATE

CHAIRMAN STANDARDS COMMITTEE APPROVED — JULY 03,2002 DATE

DEPUTY DIRECTOR

RIGHT OF WAY MARKER

STANDARD DRAWING TITLE

STD DWG
GW 6