NOTES:

1. ON BOTH SIDES OF CHANNEL INSTALL BEARING PIPES, CONCRETE BLOCKS AND TURN BUCKLES.
2. INSTALLED WIRE ROPE ON THE UPSTREAM SIDE OF THE POSTS. USE 1/2" DIA. WIRE 6"x 12" WITH BREAKING STRENGTH OF 10000 lbs.

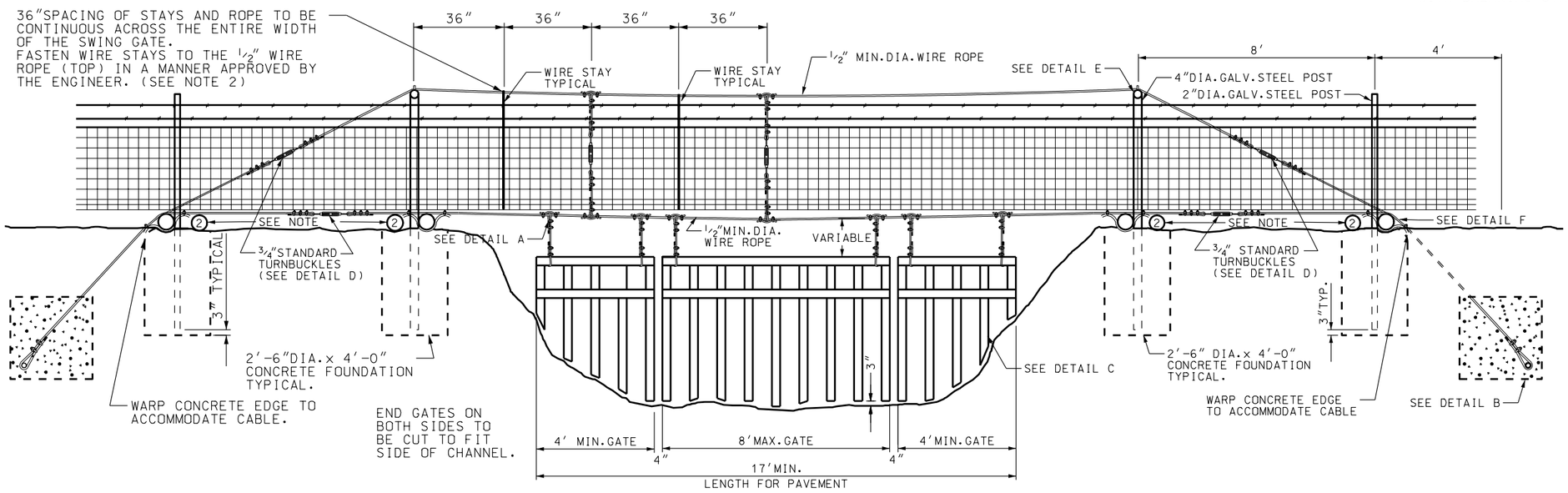

INSTALLATION DETAIL

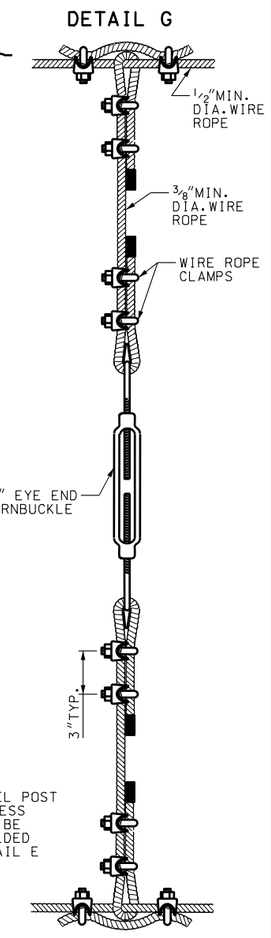

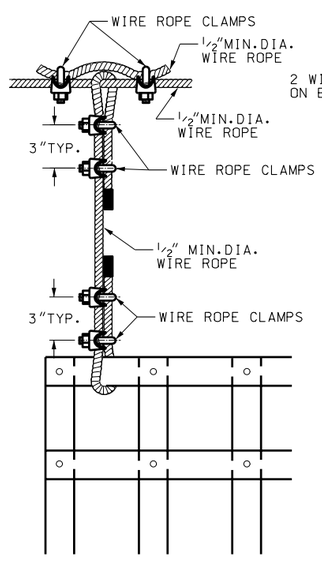

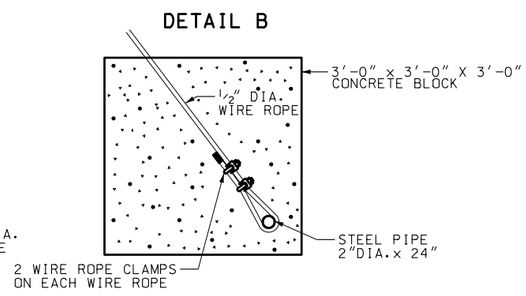

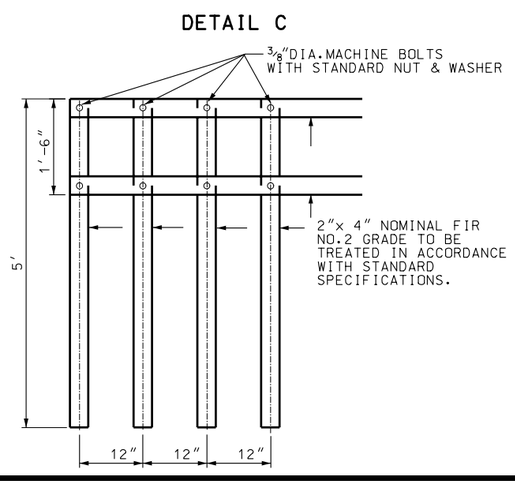

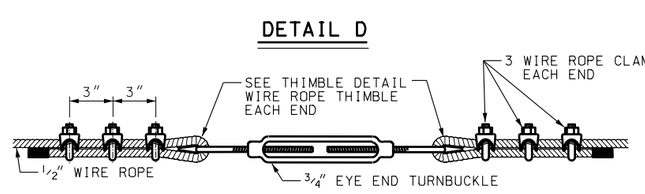

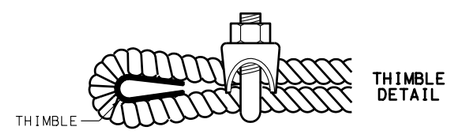

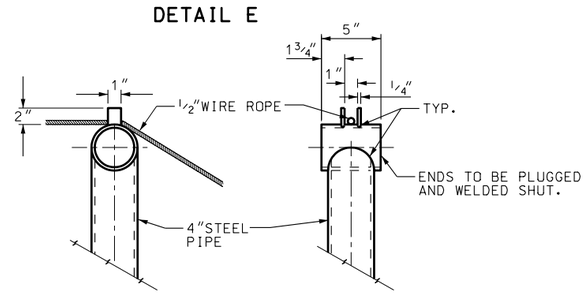

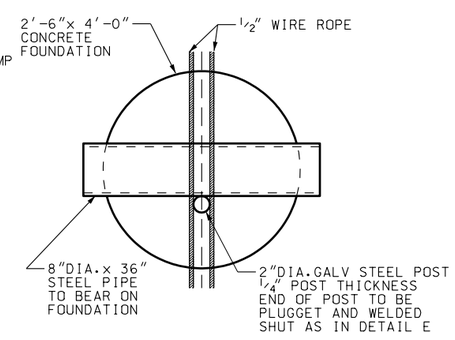

NO.	DATE	APPR.	REMARKS

REVISIONS

UTAH DEPARTMENT OF TRANSPORTATION
STANDARD DRAWINGS FOR ROAD AND BRIDGE CONSTRUCTION
SALT LAKE CITY, UTAH

RECOMMENDED FOR APPROVAL — JULY 03,2002 DATE

CHAIRMAN STANDARDS COMMITTEE APPROVED — JULY 03,2002 DATE

DEPUTY DIRECTOR

STANDARD DRAWING TITLE

SWING GATES
TYPE II
FOR GATES WIDER THAN 17'

STD DWG
FG 5