## SCHEDULE OF INSTALLATION

| LINE NO | DIMENSIONS | | | | MAXIMUM PIPE DIA. | | REINFORCING STEEL | | | | | | | | | | | | QUANTITIES | | |
|---|---|---|---|---|---|---|---|---|---|---|---|---|---|---|---|---|---|---|---|---|---|
| | | | | | | | A | | B | | C | | D | | E | | F | | REINFORCING STEEL | CONCRETE | STRUCTURAL STEEL |
| | H | W | L | K | R.C.P. | C.M.P. | N | LENGTH | N | LENGTH | N | LENGTH | N | LENGTH | N | LENGTH | N | LENGTH | LBS. | CUBIC YARD | LBS. |
| 1 | 2'-0 | 1'-8 | 7'-9 3/8 | 1'-6 | ---- | 15" | 7 | 8'-6 | 13 | 2'-5 | 9 | 1'-9 | 2 | 1'-8 | 9 | 2'-0 | 1 | 11'-0 | 145.0 | 1.14 | 594.0 |
| 2 | 2'-6 | 1'-8 | 7'-9 3/8 | 2'-0 | 12" | 18" | 9 | 8'-6 | 15 | 2'-5 | 9 | 2'-3 | 2 | 2'-2 | 9 | 2'-6 | 1 | 11'-0 | 178.2 | 1.33 | 594.0 |
| 3 | 3'-0 | 1'-8 | 7'-9 3/8 | 2'-6 | 15" | 18" | 9 | 8'-6 | 15 | 2'-5 | 9 | 2'-9 | 2 | 2'-8 | 9 | 3'-0 | 1 | 11'-0 | 188.6 | 1.52 | 594.0 |
| 4 | 3'-6 | 1'-8 | 7'-9 3/8 | 3'-0 | 18" | 18" | 11 | 8'-6 | 17 | 2'-5 | 9 | 3'-3 | 2 | 3'-2 | 9 | 3'-6 | 1 | 11'-0 | 221.8 | 1.71 | 594.0 |
| 5 | 4'-0 | 1'-8 | 7'-9 3/8 | 3'-6 | 18" | 18" | 11 | 8'-6 | 17 | 2'-5 | 9 | 3'-9 | 2 | 3'-8 | 9 | 4'-0 | 1 | 11'-0 | 232.2 | 1.90 | 594.0 |

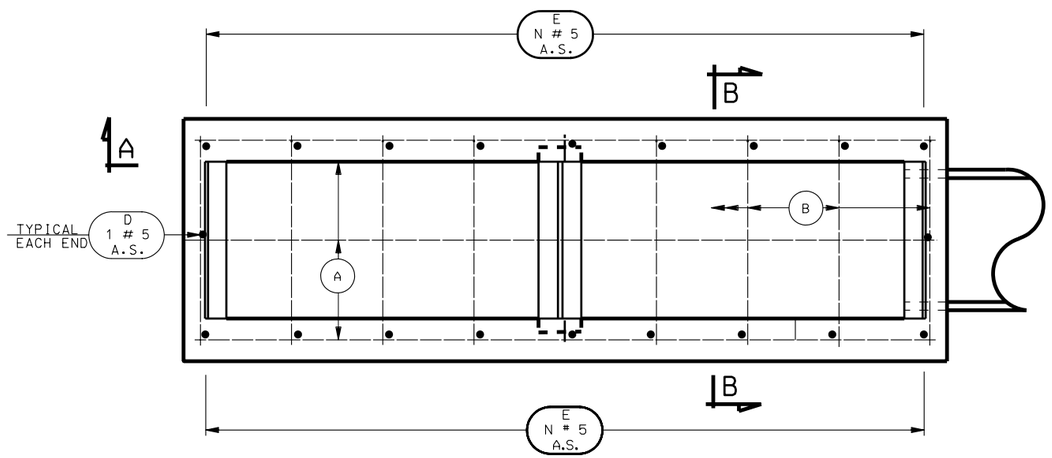


PLAN VIEW

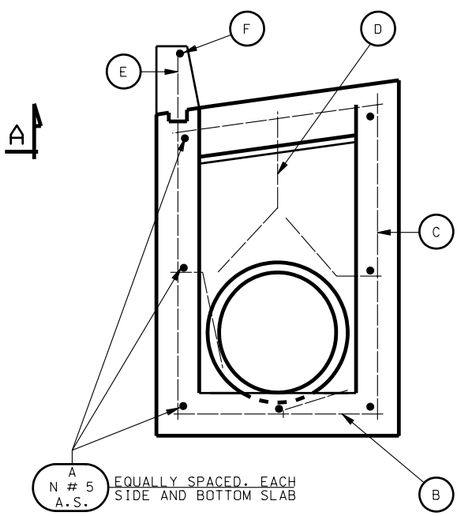


SECTION B-B

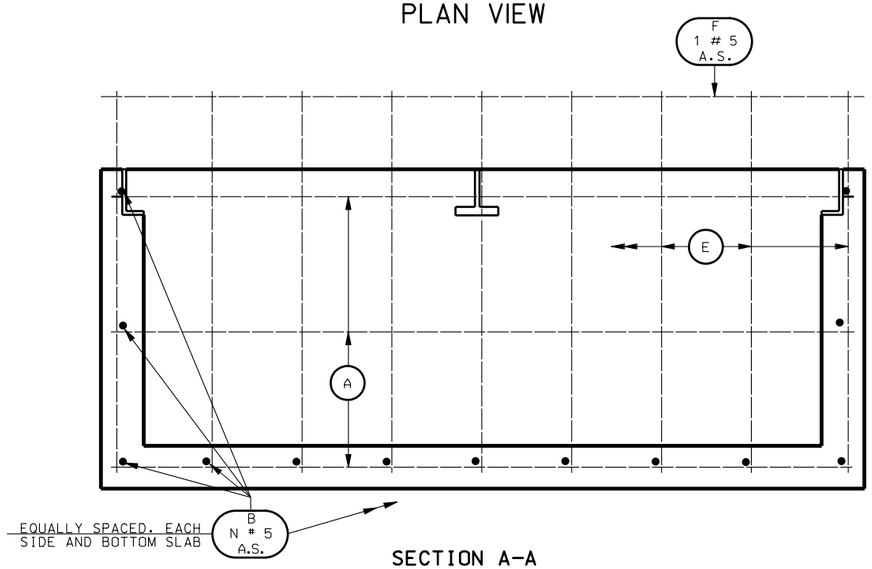


SECTION A-A

| TABLE "A" | | | |
|---|---|---|---|
| R.C.P. | | C.M.P. | |
| DIA. | CU. YDS. | DIA. | CU. YDS. |
| 12" | 0.023 | 12" | 0.015 |
| 15" | 0.031 | 15" | 0.023 |
| 18" | 0.041 | 18" | 0.033 |

**NOTES:**

1. INCLUDE CONCRETE QUANTITIES FOR CURB AND GUTTER IN ROADWAY QUANTITIES.
2. DEDUCT CONCRETE DISPLACED BY PIPE(S), TABLE "A", FROM CONCRETE QUANTITIES GIVEN IN SCHEDULE OF INSTALLATION.
3. CUT AND BEND REINFORCING STEEL AS NECESSARY TO CLEAR PIPE(S) AND MAINTAIN 2" CLEARANCE.

REVISIONS

| NO. | DATE | APPR. | REMARKS |
|---|---|---|---|
| | | | |

UTAH DEPARTMENT OF TRANSPORTATION
STANDARD DRAWINGS FOR ROAD AND BRIDGE CONSTRUCTION
SALT LAKE CITY, UTAH

RECOMMENDED FOR APPROVAL — JULY 03,2002 DATE

CHAIRMAN STANDARDS COMMITTEE APPROVED — JULY 03,2002 DATE

DEPUTY DIRECTOR

STANDARD DRAWING TITLE

# DOUBLE CATCH BASIN

STD DWG

CB 8B